# South Carolina Department of Education
# Maintenance Manual




## Revised 2026

The policies established herein are to ensure the greatest degree of safety for personnel and equipment used to provide and support the Student Transportation Program under the direction of the South Carolina Department of Education. The SCDE Office of Transportation shall be responsible for administering and monitoring these maintenance policies to ensure compliance with the policies set forth herein. If no SCDE policy exist, or is inconclusive, consult the OEM service/maintenance literature for additional information.

The SCDE Maintenance Policy Committee developed the policies and procedures included in the manual. Current committee members are:

| **Service Manager** | **Fleet Specialists** |
|---|---|
| Steve Cox – Abbeville | William McDaniel |
| Scott Fancher - Spartanburg | James Miller |
| Richard Jenkins – Darlington | Patrick Nesmith |
| Gregory Reed – Summerville | Justin Roach |
| John Elliott – Socastee | Wayne Southard |
| Justin Peake – Fairfield | Andrew Williams |

| **Other** |
|---|
| Ray Poore – Training Coordinator |
| Robert Hoffman – Regional Manager |
| Luke Patrick – Fleet Manager |

# SCDE MAINTENANCE MANUAL


Air Brake Adjustment…….. Page 5
Air Dryer Service……. Page 7
Air Reservoir Draining……. Page 8
Annual Decal Placement ……. Page 9
Annual Maintenance (Buses & Support)….. Page 10
Annual Maintenance (Tractor & Forklift) …. Page 12
Anti-Idle …….. Page 14
Automatic Transmission Service … Page 15
Automatic Transmission Replacement … Page 16
Battery Maintenance ……. Page 17
Broom Clip Installation ……... Page 19
Engine Air Filter Service …… Page 20
Engine Fuel Filter Service …….. Page 21
Engine Starting Aids ……... Page 22
Fuel Dispensing …….. Page 23
High Wind Operation …… Page 29
Installation of Communication Equipment …. Page 30
Installation of Accessories …….. Page 31
Installation of Non-Lyrical Audio …….. Page 32
Installation of Support Vehicle Logos … Page 33
Junking Procedures ……. Page 34
Oil Change/Sampling …….. Page 35
Oxygen Decal Installation ……... Page 36
Post-Accident/Incident …… Page 37
Repair of Permitted Buses ……... Page 38
Request, Titles …… Page 39
Request, Major Components …….. Page 40
Service Calls …… Page 42

Status Change ……. Page 43
Technical Training …….. Page 44
Technician Check Sheets …… Page 47
Towing of Buses ……. Page 48
Tractor & Implements ……. Page 49
Vehicle Inspections ……. Page 50
Vehicle End Lifts ……. Page 51
Vehicle and Equipment remaining OEM ….. Page 55
Wheel Bearing/Seal Service Interval ……. Page 56
Wheel Bearing Service Procedure ……. Page 58

## AIR BRAKE ADJUSTMENT

**The proper method for checking brake adjustment on air brake equipped vehicles is to measure the stroke of the brake chamber push rod. To determine the stroke of the brake chamber push rod:**

**Measure the distance from the brake chamber to the center of the clevis pin with the brakes at rest (measurement A),**
**measure the distance from the brake chamber to the center of the clevis pin with the brakes applied using a minimum of 80 psi air pressure (measurement B), and subtract measurement A from measurement B to obtain actual stroke.**

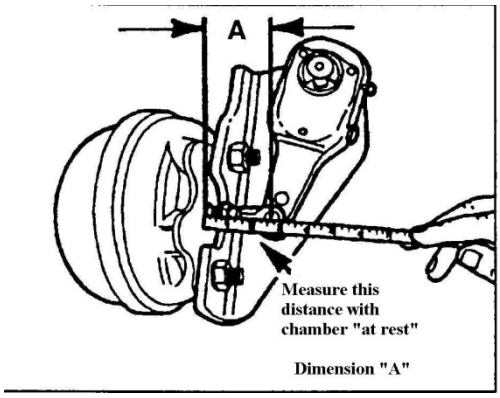


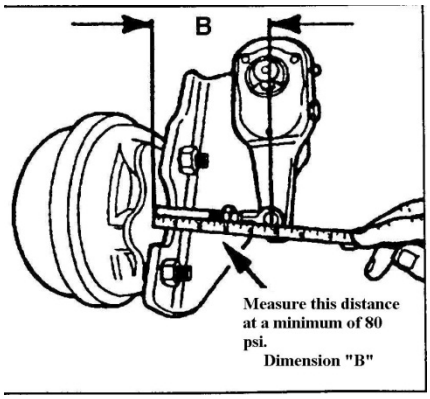


**The stroke is then compared to the following table according to the type of brake chamber being measured. Measurements must never exceed the "Maximum Legal Stroke".**

**Manually adjusting automatic slack adjusters should be done only during installation or for an emergency move to a repair facility. Manual adjustment fails to address the true reason why the brakes are not maintaining adjustment, giving the technician a false sense of security about the effectiveness of the brakes, which are likely to go out of adjustment again soon. This practice also can cause abnormal wear to the internal adjusting mechanism, which can lead to brake failure.**

| Chamber Type | Maximum Legal Stroke |
|---|---|
| 12 | 1 3/8” |
| 16 | 1 ¾” |
| 24 | 1 ¾” |
| 30 | 2" |
| 30 Long Stroke | 2 ½” |

**Also of importance when checking brake measurements is to evaluate the angle created between the brake chamber push rod and the slack adjuster with the brakes applied. This angle should be greater than or equal to 90 degrees. If this angle becomes less than 90 degrees leverage is lost and braking capacity can be reduced.**

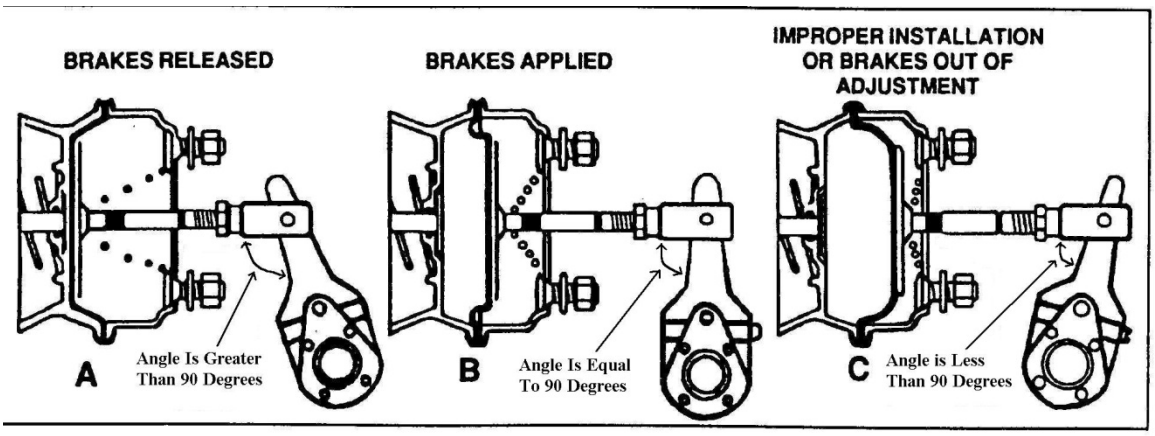


**If there are any questions about the proper methods for checking or making brake adjustments on vehicles equipped with air brakes, please contact your assigned Fleet Specialist.**

**Per SCDE Vehicle and equipment remaining OEM policy, all replacement brake components must be same style and type as OEM.**

## AIR DRYER SERVICE

**The Air dryer desiccant filter/cartridge must be changed, and the purge valve must be serviced during Annual Repair every three years or follow the current maintenance software PM schedule.**

**At this time, air dryers, dryer housings, plumbing and all mounting attachments should also be inspected and serviced/replaced if any inspection indicates defects or possible failure.**

**All manufacturers' installation instructions must be followed whenever servicing/replacing air dryer systems.**

## SCDE VEHICLE AIR RESEVOIR DRAIN POLICY

***This policy pertains to all SCDE air brake equipped vehicles. For additional instructions and information regarding buses, refer to the SCDE Driver Training manual.***

**Our policy on this matter is to ensure that no one can enter a parked bus and release the brakes without first starting the engine. To assist in complying with this policy, please provide the following instructions to all school districts, driver trainers, shop employees and others as may be appropriate:**

**On all vehicles equipped with air brakes, the air shall be fully exhausted from all brake system reservoirs at any time the vehicle is parked and left unattended. This may be accomplished by either fanning the brakes or by using air drain switch, if equipped.**

## ANNUAL CERTIFICATE PLACEMENT

**The annual certificate “decal” on all buses shall be placed in the lower right corner of the first passenger window behind the entrance door.**

**All highway use support vehicles shall have the decal placed in the lower left side of the windshield.**

**ANNUAL MAINTENENCE (Buses & Support Vehicles)**

**All Buses and support vehicles listed in "Route" (AR), "Spare" (AS), or "Active Temporary Hold" (AH) status shall have a complete maintenance service performed annually. The period between annual maintenance services shall not exceed 12 months. If an annual maintenance service isn't performed within the 12-month period, the vehicle shall be placed Out of Service (OOS) until such time as the Annual Maintenance service is performed. All vehicles in an operational (spare or route) status shall have a current annual maintenance decal installed. The decal certificate number shall be recorded in the current maintenance software. The annual decal cannot be issued until after a post annual inspection by a certified SCDE inspector, other than the individual that performed the annual maintenance.**

**The term "Annual Maintenance" shall mean a complete and thorough inspection and repair of the vehicle, including all checklists and test results in Current maintenance software. The following maintenance shall be performed with all appropriate documentation completed:**

- **Engine Oil Change: The vehicles engine oil shall be changed, and chassis lubricated in accordance with SCDE policy.**
- **All filters: Shall be serviced in accordance with the SCDE filter change policy criteria.**
- **Transmission Service: Shall be serviced in accordance with the SCDE automatic transmission service policy criteria.**
- **Wheel Bearings: Shall be serviced in accordance with the SCDE wheel bearing service criteria.**

**Before starting, and upon completion of the Annual repair service, all vehicles must be road tested and inspected by the Service Manager / Assistant Service Manager. All annual data should be entered in the maintenance database immediately after the annual repair is completed.**

**All personnel performing annual maintenance service must be certified by the SCDE in School Bus Brakes and Vehicle Inspection. The exception to non-certified personnel performing the required service is that personnel performing the service must be trained by an SCDE certified Inspector and certified School Bus Brakes. All service and documentation must be reviewed and signed off by SCDE certified personnel.**

**ANNUAL MAINTENENCE SERVICE (Tractors, Mowers, and Forklifts)**

**(*) Forklifts, Mowers, and Tractors shall have annual maintenance service performed every year. Those maintenance services outside the scope of our shop personnel and requiring specialized tools or equipment should contact their supervisor for instructions on contracting this maintenance.**

**Anti-Idle Policy**

**The following policy addresses exhaust emissions from both Gasoline and Diesel-powered vehicles owned by the SCDE.**

**The emissions from combustion powered engines have the potential to adversely impact students and staff as well as the surrounding environment. Idling vehicles can also waste fuel and financial resources.**

**This policy is established to help eliminate all unnecessary idling by SCDE school buses such that idling time is minimized in all aspects of school bus operation.**

**Policy**

1) **When school bus drivers arrive at loading or unloading areas to drop off or pick up passengers, they should turn off their buses as soon as possible to eliminate idling time and reduce harmful emissions. The school bus should not be restarted until it is ready to depart and there is a clear path to exit the pick-up area. Exceptions include conditions that would compromise passenger safety, such as:**

   A) **Extreme weather conditions**
   B) **Idling in traffic**
   C) **School Emergencies**

2) **At school bus parking locations, limit the idling time during early morning warm-up to what is recommended by the manufacturer (generally 3-5 minutes) in all but the coldest weather.**

3) **Buses should not idle while waiting for students during field trips, extracurricular activities or other events where students are transported off school grounds.**

4) **In colder weather, schools are directed to provide a space inside the school where bus drivers who arrive early can wait.**

5) **In colder weather, if the warmth of the bus is an issue, idling is to be at a very minimum and occur outside the school zone. The idle time in this situation shall not exceed 10 minutes. The "warmed" bus is to enter the school zone as close to pick-up time as possible to maintain warmth and then shut down.**

6) **District Transportation staff are directed to revise bus schedules so that school bus caravanning can be avoided, and the cleanest buses assigned to the longest routes.**

7) **All drivers shall receive a copy of this policy at the beginning of every school year.**

**Starting and Leaving Bus – (defined)**

**§59-67-190 states the "Driver is prohibited from leaving bus while engine is running. No driver or operator of a school bus shall leave the bus while the engine is running." The SCDE Office of General Counsel was asked to interpret what the word "leave" means.**

**This review concluded that the SCDE will interpret the word "leave" to mean that the school bus driver assigned to the school bus must be in the immediate vicinity of the bus, such as loading students while using a lift or conducting a pre-trip inspection. However, the driver cannot walk away from the bus while it is running, as is sometimes done to let the bus warm up. This means that when a bus is running there should be one driver per bus, not one driver cranking and warming up multiple buses.**

**The SCDE "Anti-Idle" policy states that buses should not be allowed to warm up longer than 3-5 minutes before the bus route begins. However, during cold weather drivers are allowed to start the engine a maximum of an additional five minutes before the route begins for the purpose of heating the interior of the bus and clearing/defrosting the windshield and windows in the driver's area. If heating/defrosting is not necessary, the additional minutes are not allowed. These guidelines are necessary because additional engine warm up time adds hours of operation to the engine, increasing fuel consumption and cost.**

## AUTOMATIC TRANSMISSION FLUID CHANGE INTERVALS

**All new buses will undergo a break-in period spin on filter change at approximately 5,000 miles.**

**All remaining transmission service will be conducted in accordance with current maintenance software maintenance schedule.**

## RE-MAN AUTOMATIC TRANSMISSION REPLACEMENT

**Once the replacement transmission is installed, you will need to:**

- **Drain all fluid from the replaced transmission**
- **Install all shipping plugs removed from the replacement transmission**
- **Place the core unit on the replacement transmission shipping crate**
- **Secure the transmission and return in the shipping crate provided by the vendor.**

**Each shop is responsible for ensuring that all cores are returned within thirty (30) days from receipt of the replacement transmission.**

**Only synthetic transmission fluid is to be used in all transmissions.**

**Our policy is that each time that an automatic transmission is replaced you will flush the cooler and cooler lines and refill with synthetic transmission fluid.**

## VEHICLE BATTERY MAINTENANCE

### A. Battery Warranty

**All batteries must be warranted for 36 months. Batteries failing within the first twelve (12) months of service shall be replaced at no charge. Batteries failing after twelve (12) months shall be adjusted on a pro-rata basis. *The warranty period for batteries begins when the battery is installed in a SCDE vehicle*.**

**Batteries that fail under the pro-rata period are adjusted by issuance of a credit memo to the shop submitting the failed battery. The credit memo shall state the amount of reimbursement due based on current contract prices and remaining warranty period.**

**The school bus shop must maintain records of installation. These records are to be provided to the supplier with each battery submitted for adjustment.**

**Each time a new battery is installed in an SCDE vehicle, the top of the battery must be marked with a paint pen (yellow) to indicate the Installation Date and the Vehicle Number. These markings will be placed as indicated in the attached photo on page two.**

### B. Battery Cores

**EPA regulations require that we either return one core for each battery delivered or that we pay a core charge. Currently the core charge for a Group 31 battery is almost fifty percent of the cost of a new battery. *We should never pay a core charge.* Orders for batteries should only be placed when there are sufficient cores to return. The SCDE employee receiving delivery of the batteries must ensure that the person making the delivery signs and dates documentation identifying the number of cores returned.**

### C. Charging, Testing and Disposal

**Batteries removed from vehicles will be placed in the shop's designated Battery Charging Area daily. Discharged batteries will be charged no less than twice per week. The longer a battery sits in a discharged state, the less chance there is of recovery. To properly charge and/or test a stud type battery requires the installation of lead post adapters. This provides the lead-on-lead contact required for a good connection. Placing charging or test leads on the steel stud will not allow the battery to be fully charged or properly tested.**

**After proper charging and testing, all units that test "good" will be documented in Current maintenance software when reinstalled. All units testing as defective will then be checked to see if the battery is still under warranty. If so, the shop will contact the vendor regarding warranty credit. If not, the battery will be stored in a secure location awaiting pick up as a core.**

**You must follow all charging and testing equipment's operating procedures and always wear the proper PPE whenever servicing batteries.**

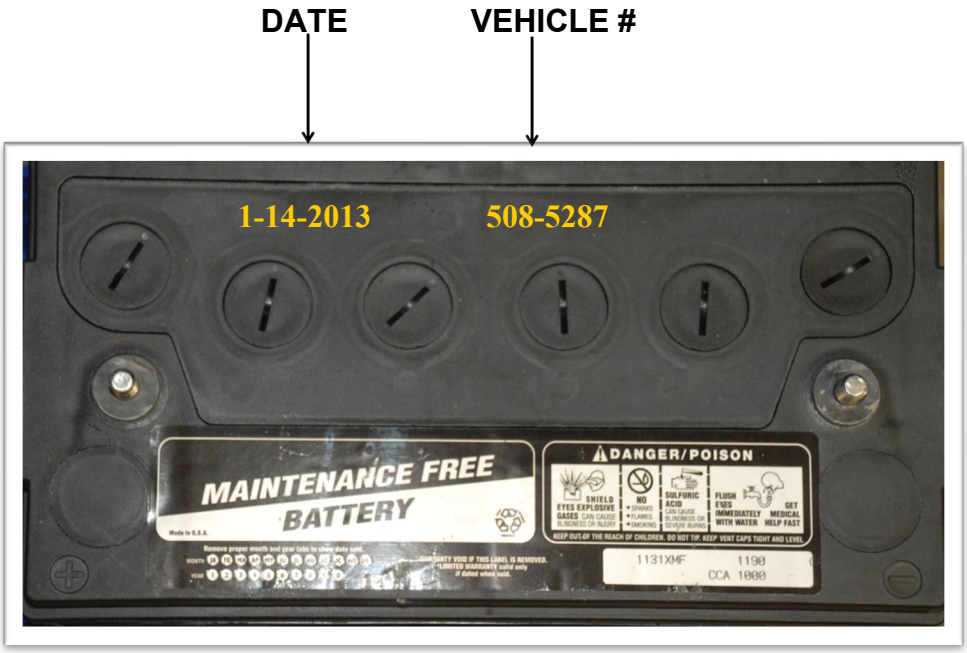


****Electric Buses are OEM equipped with AGM batteries and must be replaced with AGM batteries. They have different service requirements. Be sure to follow Manufactures recommendations for service and replacement.****

**Broom Holder**

**Must remain OEM style.**

**It is not permissible for brooms to be stored inside of the school buses unless they are secured in these holders.**

## ENGINE AIR FILTER REPLACEMENT

**The engine air filter should be changed at least every two years during Annual Repair or per Current maintenance software maintenance schedule.**

**Engine air filters, housing, plumbing and mounting attachments should also be serviced/replaced, if any inspection indicates possible failure.**

**All manufacturers installation instructions for air intake system service must be followed whenever replacing air filters.**

## ENGINE FUEL FILTER REPLACEMENT

**The engine fuel filter should be changed during Annual Repair or as needed.**

**Engine fuel filters, housing, plumbing and mounting attachments should also be serviced/replaced if any inspection indicates possible failure.**

**All manufacturers installation and service instructions for fuel supply systems must be followed whenever replacing fuel filters.**

## ENGINE STARTING AIDS

**Chemical starting aids shall not be used to assist or aid in the starting of any SCDE diesel powered vehicle.**

**The term "chemical" shall be defined as: ether, gasoline, hairspray, deodorant, alcohol, propellant or any flammable substance.**

# Fuel Dispensing Operations

## Fueling From Tanker

To fuel from a Tanker You must Know how to:

1. Operate all controls needed to engage the pump (PTO). Know the proper way to engage and disengage the PTO. Know the proper care and operation of the PTO. NEVER drive tanker with PTO engaged!
    a. There is a push/pull knob in the cab that controls the PTO.
    b. The proper way to engage the PTO. Know the proper care and operation of the PTO. Do not drive tanker with PTO engaged! To engage the PTO:
        1) Set parking brake.
        2) Place tanker in neutral.
        3) On standard transmission, depress clutch.
        4) Pull the PTO control outward.
        5) On standard transmission, release clutch
        6) Operate at Idle only.
        7) DO NOT MOVE TANKER WITH PTO ENGAGED!
        8) Disengage PTO before moving tanker.

        NOTE: The PTO also has a warning light and/or buzzer to let the driver know it is engaged.

    c. The proper way to disengage the PTO.
        1) To disengage PTO follow the same procedure as above except you would push the control knob inward.

2. Operate the meter, how to read it, and how to reset it.
    a. At the end of each fuel run you should take the totalizer meter reading.
        1) These are the small numbers on the meter that do not reset.
        2) Check this number before you begin to be sure it is still the same as the ending reading.
        3) There is a place on your fuel sheet to record this number.
    b. As you prepare to fuel each vehicle you should reset the meter to “0” by rotating the large knob on the right side of the meter.

3. Open the fuel doors and fuel caps. Learn which key numbers are used for which vehicles.

4. Properly handle and operate the fuel nozzle. NEVER leave the fuel nozzle unattended while fueling. Do not drag the nozzle. Report a leaking or inoperative nozzle immediately.

5. Properly care for and store the fuel hose. NEVER drag the fuel hose when moving the tanker. Avoid sharp objects when storing/moving the fuel hose. A clean hose will provide better service and last much longer.

6. Keep Tanker clean and orderly. This is a safety issue as well as important maintenance.

7. Maintain the oil and coolant tanks on the tanker. These must be kept clean and leak free.

8. Use and store the air hose and air tools provided for tire changing.
    a. Know and follow all safety rules and procedures when changing tires.
    b. Know and follow all safety rules and procedures when using jacks and stands.

9. Properly fill the fuel tanks without overfilling and how to prevent spillage.

10. Check the following on ALL vehicles being fueled.
    a. Engine oil level
    b. Coolant level
    c. Fluid leaks
    d. Belts and hoses
    e. DEF level
    f. Tires – pressure and wear

11. All contract fueled buses must have fluids and tires checked at least once per week.
12. All District and Charter School buses must have fluids and tires checked at each fueling.
13. Personal Protective gear.
    a. Eye protection and know how to use it. Wear face/eye protection when fueling.
    b. Gloves and know how to use them. Gloves can be worn when fueling if needed.

## Fueling From Shop Pump

1. Know the location and operation of all controls and safety features at the facility.
    a. The warning sign at the fuel island and explain what each item means.
        - Do not leave the nozzle unattended.
        - No smoking
        - Turn off engine.
        - Operators and passengers outside of vehicle (Indicate safe place for them to wait)
        - Unlawful to dispense in unapproved containers.

    b. The location of the fire extinguisher and its proper operation.
    c. The location of the Emergency cut off switch and its operation.
    d. The emergency spill kit and how to use it.
    e. The line leak detector and how to reset it.

2. Personal Protective gear.
    c. Eye protection and know how to use it. Wear face/eye protection when fueling.
    d. Gloves and know how to use them. Gloves can be worn when fueling if needed.

3. Operation of shop pump, know:
    a. The location of all electrical switches needed to energize the pump. Know the proper way to turn the pump on and off and how not to trip the mechanical line leak detector.

    b. The meter and know how to reset and read it.

        1) At the end of each day, you should take the totalizer meter reading.
            (a) These are the small numbers on the meter that do not reset.
            (b) Check this number before you begin to be sure it is still the same as the ending reading.
            (c) There is a place on your fuel sheet to record this number.

        2) As you prepare to fuel each vehicle you should reset the meter to “0” by rotating the large knob on the right side of the meter.

    c. How to open the fuel doors and fuel caps. Learn which key numbers are used for which vehicles.

    d. Proper use and care of fuel nozzle. Caution - never to leave the nozzle unattended.

    e. Proper fueling procedure and how not to overfill tank and to prevent spillage.

f. The location of the fuel sheet used to record dispensing. How to record fuel dispensed and location of and how to read odometer and hour meter.

4. Required maintenance, know how to:
    a. Check the oil level of the various vehicles that will be serviced.
    b. Check the coolant level of vehicles equipped with a sight glass. Caution: Do not attempt to open a hot cooling system.
    c. Visually inspect belts and hoses.
    d. Visually inspect tires and check inflation.
    e. Proceed if anything is found to be deficient.
5. For shops with gasoline dispensers on the island. Be sure you know which is gasoline and which is diesel and how to determine what fuel the vehicle requires.

## Servicing Buses

As a tanker operator you must know how to perform these tasks on the buses.

1. Always use proper fueling procedure and do not overfill tank and always try to prevent spillage.
    a. After nozzle shuts off the first time, start fuel again to confirm tank is full.
    b. Do not try to pack the tank or fill to brim, leave room for expansion.
2. Know how to record fuel dispensed and location of and how to read odometer and hour meter. The newer vehicles with electronic odometers/hour meters have different procedures for reading.
    a. Record fuel dispensed before resetting the meter. Do Not rely on memory!
    b. Record whole gallons only.
        1) Round-Off procedure
            (a) 0 to 4/10 (less than 5/10) round off downward (i.e.: 8.3 = 8.0)
            (b) 5/10 to 9/10 round off upward (i.e.: 8.7 = 9.0)
    c. Double check numbers entered on fuel sheet and unless using a new sheet, look back to see if amounts are in line with previous fueling.
3. Proper care and storage of fuel hose. Do not drag hose with tanker. Avoid sharp objects when moving hose. A clean hose will last much longer.

### Know how to check the following:

1. Engine oil level

a. Oil can be reliably checked on any vehicle except one that was started COLD and run a very short time and shut off. (still cold)
b. Remove dipstick, wipe clean and reinsert completely and remove again.
c. Oil should be between the “full” and “add” marks on the stick. If it is, then it is “OK”.
d. NOTE: Diesel engines require 2 quarts of oil when down to the “add” mark.
e. When adding oil
    1) Be sure container is clean as well as oil.
    2) Add oil to the oil fill location on the engine only.
    3) Accurately measure and record oil dispensed.

2. Coolant level
    a. Caution do not attempt to open a hot cooling system.
    b. Visually check level by inspecting sight glass or level in plastic recovery tank.
    c. If level is low, do a brief visual inspection for signs of a leak.
    d. Add coolant to the proper level (engine temperature dependent)
    e. Add only mixed coolant from tank. Never add plain water or pure antifreeze.
    f. Be sure container is clean and that you add coolant to the proper location.
3. Diesel Exhaust Fluid (DEF)
    a. Fluid level can be checked using the bar indicators on the fuel gauge.
    b. Fluid levels showing two bars or less MUST be filled. If you have above two bars, follow shop policy or schedule.
4. Belts and hoses
    a. Visually inspect for damaged or deteriorating belts and hoses
    b. Leaking or swelling of rubber hoses
    c. Loose clamps
    d. Loose, damaged, slipping, or missing belts.
    e. Loose or missing hardware.
    f. Report any problems immediately.
5. Tires
    a. Pressure
        1) Visually inspect tires for proper inflation.
        2) Tires that are obviously low on pressure will have to be changed.
        3) If pressure is in question, confirm with a gauge.
        4) Do not re-inflate a tire that has been run low on pressure (below 80%).

b. Wear
    1) Visually inspect tires for wear
    2) Any front tire that is at or below 4/32 inch thread depth must be changed
    3) Any rear tire that is at or below 3/32 inch thread depth must be changed
    4) Any tire with severely abnormal wear must be changed (i.e.: Cupped out, feathered, etc.)

c. Damage
    1) Visually inspect tires for damage (cuts, punctures, foreign objects, etc.)
    2) Any tire with damage that threatens the life or integrity of the tire will have to be changed.

d. Matching
    1) Visually inspect tires for obvious mismatching
        (a) Do not mix radial and bias ply tires on the same vehicle.
        (b) Tires on the same axle should be matched by size, type, load range, tread pattern and tread depth.
        (c) Dual rear tires must be size matched by measurement. The tire pair must be within ¼ inch diameter or ¾ inch circumference of each other. This equates to approximately 4/32" tread depth. If within these limits but not identical, the larger tire must be on the outside.
        (d) Rims also must be matched on the same vehicle by style and color. Variances in width and rim off-set will affect dual tire spacing.

## HIGH WIND OPERATION

**During periods of inclement weather, many factors must be considered, including vehicle size, wind speed, wind direction, road conditions, and visibility.**

**When wind forces of 30 MPH or greater strike the side of a school bus, the forces exerted can exceed 500 pounds. Forces of this magnitude can greatly impact steering control and tracking of school buses in motion.**

**The overall effect of high winds on parked buses appears to be minimal. While the forces exerted from broadside winds on a school bus are substantial, in most cases, buses parked on a level surface in an open area can withstand wind forces of up to 100 MPH without danger of rollover. If, however, buses are parked on inclines, the amount of wind required to cause rollover is diminished. Buses parked on an incline of approximately 30 degrees are subject to rollover with winds in the 60 MPH range.**

**When consulting with school districts regarding periods of high winds, please offer the following recommendations:**

1. **Remind drivers of the hazards of operating vehicles during periods of high winds and all of the contributing factors.**

2. **Limit the operation of school buses to periods with sustained winds below 30 MPH.**

3. **Always try to park buses in an open area and on level ground.**

4. **Close all windows, secure all doors, and, in particular, secure all roof hatches.**

**Installation of Communication, GPS/AVL, Video/Audio Recording and/or Control Program Radio Equipment in State-Owned School Buses Agreement**

The South Carolina Department of Education (SCDE) hereby gives the following school district _____ (District) permission to install communication, GPS/AVL, video/audio recording, and controlled program radio equipment (devices) on school buses assigned to the district under the following conditions:

1. The District is required to contact their servicing school bus maintenance shop during their planning stage, and prior to the purchase or installation of any equipment to inform SCDE of their desire and intent;
2. The District (or its contractor) will consult with the SCDE Fleet Specialist to describe installation and receive approval prior to any work being performed;
3. The District is fully responsible for the cost of the installation and any and all materials used in installation;
4. The District (or its contractor) will install the devices under the supervision of the SCDE and in accordance with SCDE specifications and guidelines;
5. The District (or its contractor) may not move or otherwise alter the location or form of any SCDE owned equipment without prior approval;
6. The District (or its contractor) may not install any items in a vehicle's emergency equipment compartment, nor may it interfere with the operation of the access door;
7. The District (or its contractor) must ensure that the equipment, installation, and/or wiring does not interfere with the operation of the school bus;
8. The District (or its contractor) may not install any equipment that requires the drilling of holes in or through a roof. All external equipment (ex: antennas) must be mounted on mirror brackets;
9. The District is responsible for any and all damage to the school bus caused by the installation and/or operation of the devices;
10. The District is responsible for the control of the devices and content of any recordings and broadcast, if applicable;
11. The District (or its contractor) will remove the devices if at any time the devices become inoperable, the bus needs to be assigned to a different school district, or the SCDE is directed to have the devices removed; and
12. The District is solely liable for any action brought on behalf of any party related to the use of such devices in the school buses.
13. The District is responsible for providing a copy of any video/audio recording immediately after an event to the SCDE that may provide information regarding damages to the school bus, injuries to persons on or around the school bus or any prosecutorial activity involving the SCDE.

The District hereby agrees to the conditions set forth above.

| | |
|---|---|
| _____ | _____ |
| Authorized Agent of District | SC Department of Education |
| _____ | _____ |
| Date | Date |

## INSTALLATION OF ACCESSORIES ON SCHOOL BUSES

**The SCDE Office of Transportation discourages the use of any non-OEM (original equipment manufacturer) items on school buses. However, if a district desires to have such items on school buses assigned to their district, the following rules shall apply:**

- **System installations must be approved by the SCDE Fleet Specialist or a designee from the SCDE Director of Maintenance. The requesting school district shall make the initial request for installation through the assigned SCDE repair shop. The shop shall contact the assigned Fleet Specialist.**

- **Trash Cans – Any trash receptacle on the inside of a school bus must be permanently mounted. Trash cans will be provided and installed by SCDE.**

- **Brooms – Any broom stored on the inside of a school bus must be secured in approved mounting brackets.**

- **Electronic Equipment – Only electronic equipment (communication, video monitoring and student ID equipment) approved by the SCDE may be connected to the vehicle electrical system. In accordance with the 2015 National School Transportation Specifications and Procedures, no sound producing devices, other than the driver's communication systems may be located within 4 feet of the driver's seat.**

- **Parking Brake (PP1) Cover – Must be made of rubber or other shock absorbing material and conform to the OEM knob on the vehicle.**

- **Other – Other items that are strictly prohibited from being stored or installed on school buses include, but are not limited to carpeting/floor mats, pillows/cushions, flammable or hazardous materials and aerosol products.**

## INSTALLATION OF NON-LYRICAL AUDIO SYSTEMS

1) **The System installation must be approved by the SCDE Fleet Specialist or designee from the Fleet Manager.**

2) **The requesting school district shall make the initial request for installation through the assigned SCDE repair shop. The shop shall contact the assigned Fleet Specialist.**

3) **The system must be limited to a volume level so as not to interfere with the operation of the bus or the ability of the driver to perform their duties.**

4) **The system must be routed through the current OEM "noise cancelling" switch circuit.**

5) **The National School Transportation Specifications and Procedures, states that no sound producing devices, other than the driver's communication systems, may be located within 4 feet of the driver's seat.**

6) **The installation of the equipment (receiver and speakers) in the interior of the school bus must be accomplished so that no safety hazards are created within the passenger compartment of the school bus and to assure that nothing negates the federally mandated compartmentalization standards. This includes the location of the speakers to limit the broadcast sound in the driver seating area. (See # 5)**

7) **The Installation of Communication agreement must be signed-off on prior to any installations.**

**INSTALLATION OF SCDE SUPPORT VEHICLE LOGOS**

**Service Trucks/Cars Location: Left bottom of back glass**

**Tankers: Driver and passenger doors.**

**JUNKING PROCEDURES FOR BUSES**

**Shop Foremen must plan and manage the fueling of buses slated to be replaced to prevent excessive fuel remaining in a tank when removed from service.**

**Additionally, any useable tires on JUNK vehicles must also be removed. If tires must be reinstalled on the vehicle, this will be accomplished using tires that, because of age/condition, are no longer serviceable.**

**As a reminder, NO items are to be removed from vehicles in Hold status other than batteries, WITHOUT PRIOR WRITTEN APPROVAL FROM YOUR ASSIGNED FLEET SPECIALIST.**

**When preparing a bus for disposal, all SCDE identifying markings will be painted over in heavy black paint. The last four digits of the vehicle number nearest the entry door will remain visible until the vehicle is sold and being collected by the purchaser.**

**All OEM equipment, to include safety equipment and systems (i.e.: stop arms, warning and stop lights, fire extinguishers, first aid kits, etc.) will remain on all operational buses being sold. All lighting systems and stop arms will remain operational.**

**Inoperable vehicle being sold or disposed of as scrap may have safety and other equipment removed prior to the vehicle leaving the shop.**

## OIL CHANGE/SAMPLING PROGRAM

**Oil changes on every assigned vehicle (buses or support) that is listed in Route or Spare status must be completed in accordance with current SCDE procedures.**

**These procedures are as follows:**

**All assigned vehicles listed in a Route or Spare status shall have the engine oil changed and chassis lubricated at each current maintenance program schedule.**

**Fluids should be sampled if problems are suspected.**

## OXYGEN DECAL INSTALLATION

**As a means of providing information to emergency personnel; we shall identify buses where we transport oxygen by placing two, "Oxygen In Use" decals on each of these buses. One decal will be placed in the lower left corner of the first window behind the entrance door. The second will be placed on the closest glass surface adjacent to the opening edge of the emergency door. Do not place on the emergency door glass. Both decals will be placed so as to be visible from outside of the bus. Magnetic decals can be used and placed as close as possible to locations listed.**

**If you reach a point where the transporting of oxygen is no longer required, the decals are to be removed. Additional decals will be provided in the event that the student requiring the use of oxygen is moved to a different bus.**

**If no buses in your fleet are currently transporting oxygen, but In the future, the transport of oxygen becomes necessary please notify the office of Transportation to have the decals provided. It will be decal #27 in the SCDE decal catalog.**

**If there are any questions, please contact your assigned Fleet Specialist or the Fleet Manager.**



## POST ACCIDENT/INCIDENT INVESTIGATION

**In order to provide the safest and most reliable fleet possible the following policy shall be followed when performing a post-accident investigation.**

**A post-accident Investigation shall be performed by the Fleet Manager or his/her designee whenever an accident or incident meets the following criteria.**

**The Investigation shall be performed the next business day upon receiving the newsworthy report from the SCDE maintenance facility.**

- **The operator of an agency owned vehicle alleges a mechanical problem or condition contributed to the accident or incident.**
- **The agency owned vehicle suffers a thermal event.**
- **A fatality occurs from the accident or incident.**
- **When the Director of Maintenance deems necessary.**

**When such a Post-Accident/Incident Investigation is required the following steps must be taken.**

- **The (*) newsworthy team shall be notified via email as soon as possible after the accident/incident.**
- **The vehicle shall be sequestered at the assigned shop until the investigation is performed by the Director for Maintenance or designee.**
- **The vehicle shall not be serviced, repaired, adjusted or inspected until the investigation has been performed and has been cleared by the investigator to have such repairs or damages performed.**

**The following documentation shall be provided(printed or emailed) for presentation prior to the arrival of the investigator.**

- **Last most recent Annual Maintenance service packet**
- **Driver write-up documentation for the most previous school year. (school bus)**
- **Work orders from current maintenance software for the previous 12 operating months.**
- **A written report from the operator if available.**
- **Monthly checks for current school year.**

**The investigator shall perform the investigation and provide the Director of Maintenance a written report complete with all supporting documentation within 24 hours of the investigation. This report can be submitted electronically.**

**(*) <u>Newsworthy team:</u>**

| | | |
|---|---|---|
| **Director of Transportation** | **Driver Training and Saftey Manager** | **Fleet Manager** |
| **Safety Officer** | **Regional Manager** | **Assigned Fleet Specialist** |

## REPAIR OF PERMITTED SCDE

**Repair of state-owned school buses is the responsibility of the SCDE. However, the responsibility changes when the permitting school district uses the school bus to travel outside the boundaries of the district or at times other than regular operating hours of the shop(s). It is not possible for SCDE shop personnel to maintain a 24/7 response status. However, such a response may be available.**

**To further clarify this issue, the following guidance is given.**

**Districts are required to handle the situation when a state-owned school bus requires repair or servicing at a time or day that SCDE shops are not operational. The district can attempt to have a minor repair (tire, battery, belt) made and submit to SCDE the invoices and request reimbursement, or the district can park the school bus in a safe location, notify the SCDE, and the SCDE will respond as soon as possible.**

**If the vehicle is parked on a roadway or other unsafe location, the district should make arrangements to have the school bus towed to the nearest school bus maintenance shop, if access is possible; if access is not possible, the school bus should be towed to a private storage area near the breakdown location and wait for instructions from the SCDE. If a school bus needs repair and will not operate or is unsafe to operate, that school district can dispatch a second SCDE school bus, at no additional charge, to transport the students.**

**District operators of state-owned school buses should be given a statewide list of shop numbers and cell phone numbers to request assistance. If an SCDE employee can be reached, the shop staff should render as much assistance as possible. This may be in the form of making arrangements for repairs, towing services, providing a spare bus, or referring the caller to a local school district so that a replacement school bus can be borrowed to transport the students.**

**Requesting License Tags and Registration Forms.**

## Replacement License Tags:

**There are four instances that we request replacement license tags from DMV. When a license tag is Lost, Stolen, Destroyed or when the License tag is no longer legible to read.**

**Replacement License Tags are requested by Bus Shops in a written format (usually by e-mail). The request should include the vehicle number, VIN (vehicle identification number) license tag number and model year. All this information is not needed on this form but is required on the replacement registration form DMV 3090. It's good to have all this information as reference.**

**A DMV form 452 (Lost/Stolen or Destroyed License Plate Report Replacement Application) is processed for each request (vehicle).**

**The original copy of this form is given to DMV. Send a copy of the E-mail for DMV to reference if needed. Make a copy of the registration back and front for your files.**

**DMV will automatically issue a new registration card with each replacement license tag.**

## Replacement Registration Cards:

**Replacement Registration Cards are requested by the Bus Shops in a written format (usually by e-mail). The request should include the vehicle number, VIN (vehicle identification number) license tag number and model year.**

**A DMV form 3090 (Application for Duplicate Registration) is processed for each request (vehicle).**

**Mail To:**

**At the present time it is:**
**Darlene Heger**
**Office of Transportation**
**Department of Education**
**849 Learning Lane**
**West Columbia, SC 29172**

**Once you receive the registration card verify that the bus number and VIN are correct. The original card is entered into shop notebook and copy is placed in the vehicle. A copy shall also be scanned into the current maintenance software.**

**MAJOR COMPONENT REQUEST (Shops)**

**If a shop suspects that it may need to acquire a new or remanufactured (*) major component, the following information must be used to help determine the most economical and efficient method for placing the vehicle back in service.**

**All diagnostic procedures recommended for properly troubleshooting the component should be followed. These procedures should include service information and data from the OEM, vehicle historical data and correspondence from your assigned Fleet Specialist. After the determination has been made that a component is needed, you must make a concerted effort to ensure that a valid used component isn't available from your or any other statewide shops used inventory. This process should be carried out via email and include the Regional Manager as well as the Fleet Specialists.**

**If no valid used component is available within the statewide system then you may proceed with the purchase of the replacement component. You must follow the steps below when doing so:**

**Contact your assigned Fleet Specialist via email to discuss the request and indicate what diagnostic steps were taken along with any historical data that was gathered.**

**If the conclusion is that a component should be purchased, your assigned Fleet Specialist and Regional Manager must approve before making the purchase.**

**All current and relevant purchasing procedures/guidelines must be followed at all times.**

**Review the flow chart on page two for additional details.**

**(*) Major components are defined as:**

**Differential**
**Engine**
**Transmission**
**Turbo**
**Wheel Chair Lift**

## SERVICE CALLS

**It is the responsibility of each SCDE maintenance facility to respond to and document all reported service calls in a timely and accurate manner.**

**All Service calls must be entered directly into the shop fleets maintenance software program upon receiving notification of the call listing the complaint, cause, and correction.**

**The definition of a service call is as follows:**

- **When a technician is dispatched to repair a vehicle because it could not begin or continue its route.**
- **When a shop employee is dispatched to investigate a reported incident/accident.**

**A service call shall be recorded each time:**

- **a technician is dispatched to make repairs to a bus so that it can run or continue a route.**
- **a Shop employee is dispatched to respond to an accident.**
- **a Shop employee is dispatched to provide fuel for a bus that cannot complete its assigned route.**

**If a technician reports directly to a parking facility and makes repairs to more than one bus in order for the buses to run their route, the repair for each bus is considered an individual service call.**

**If the repairs made are part of the normal write-up process, they are not service calls.**

**Example: A bus would not start for a driver to run their AM route. The driver takes a spare that is parked at the facility. The technician makes the necessary repairs as part of his normal write-up repair process.**

## DRIVER WRITE-UPS

**All Driver Write-ups must be entered into the shop fleets maintenance software program daily, listing the complaint, cause, and correction.**

## STATUS OF SHOP ASSIGNED VEHICLES

**Before any assigned vehicle status can be changed, an email request must be submitted to the Director for Maintenance for approval. This request must originate from the Operations Manager or designee, at the shop where the vehicle is currently assigned and copied to the Regional Manager and assigned Fleet Specialist. This procedure shall also be used to transfer vehicles from shop to shop.**

**The following format shall be used whenever making a request.**

**Shop:** *Shop Name*
**Vehicle #:** *7 digit vehicle number*
**Current Status:** *Route*
**Requested Status:** *Spare*
**Current Location:** *Shop Name*
**Requested Location:** *Shop Name*

**The requesting shop shall await a response from the Fleet Specialist before proceeding with any changes. All replies and correspondence shall remain together with the original request.**

**The approved status codes are:**

- **Route**
- **Spare**
- **Hold**
- **Junk**

**If the request is for transfer the receiving shop must reply using the below format to the approval response email. The notification shall be sent to the Director for Maintenance using "Reply All" from the email client.**

**If the request is for transfer the receiving shop must reply using the below format to the approval response email. The notification shall be sent to the Director for Maintenance using "Reply All" from the email client.**

**"The _____ shop has received vehicle _____".**

## TECHNICAL TRAINING and CERTIFICATION

**The SCDE technical training program was established to provide the highest level of safety, efficiently and uniformity within the school bus maintenance program.**
**All certifications shall be valid for five (5) (3 years Forklift) years from the date stated on the certificate. Re-certification will be required every five (5) (3 years Forklift) years thereafter to maintain certification. The qualifications, training, and testing requirements for each type of certification are as follows:**

**The SCDE currently offers the following technical certification programs:**

- **Forklift operation and safety**
- **Vehicle Inspector**
- **Vehicle Inspection Program Supervisor**
- **School Bus Brakes ***
- **Fuel Tanker Operator**

**The following positions shall acquire and maintain the below technical certifications.**

**Program Coordinator: The program coordinator shall acquire and maintain the following technical certifications:**

- **Vehicle Inspection Program Coordinator certification.**
- **Forklift operation and safety certification.**

**Service Manager: The Service Manager shall acquire and maintain the following technical certifications:**

- **Vehicle Inspection certification**
- **Forklift operation and safety certification**
- **School Bus Brakes ***

**Automotive Parts Specialist: The shop clerk shall acquire and maintain the following technical certifications:**

- **Forklift operation and safety certification**

**Technician: Requirements for Technicians will be determined by each shops management staff. Generally it is recommended that all route technicians hold all the same certifications required by the Service Manager.**

**Fleet Specialist:**

- **Forklift operation and safety**
- **Vehicle inspector**
- **Vehicle Inspection Trainer Certificate**
- **Vehicle inspection program coordinator**
- **(*) School bus brakes**
- **Fuel Tanker Operator**

## Requirements for Certification:

- **Forklift operation and safety - The forklift certification program consists of training via a short video and verbal session. The testing phase will consist of both a written and operational test. A score of 70% correct is required on the written test and operational test. The certification is valid for a period of three years at which time the training session as well as the written must be repeated.**

- **Vehicle Inspection Program Supervisor – The certification program consists of classroom training along with a written test. A score of 70% correct is required on a written test. The certification is valid for a period of five years at which time the written test must be taken and a passing score of 70% correct is required.**

- **Vehicle Inspector - The certification program consists of classroom training along with a written and hands-on test. A score of 70% correct is required on both the written and hands-on test. The certification is valid for a period of five years at which time the written test must be taken and a passing score of 70% correct is required.**

- **School Bus Brakes - The certification program consists of classroom training along with a written test. A score of 70% correct is required on the written test. The certification is valid for a period of five years at which time the written test must be taken and a passing score of 70% correct is required. The classroom portion is not required for certification.**

- **Fuel Tanker Operator – The certification requires viewing the "Fuel Tanker operator" presentation and a hands-on demonstration by a certified technician. The certification is valid for a period of five years at which time a review of the training presentation and hands-on procedures must be performed.**

**All certification tests must be administrated by Fleet Specialists or the Fleet Manager.**

**TESTING REQUIREMENTS:**

**Vehicle Inspector:**

a) **The candidate will be tested by staff from the SCDE Maintenance Section.**
b) **The testing shall consist of two (2) parts, a written test and a hands-on test.**
c) **A candidate must successfully pass both parts of the test to earn certification as a Vehicle Inspector. A candidate with a score of seventy percent (70%) or better on the written test and show competency on a hands-on inspection.**

**Written Test**

a) **Consists of a multiple choice question test. All questions are related to the material in the inspection manual.**
b) **A time limit of one and one half-hours (1 and1/2) will be allowed to take the test.**
c) **Test candidates will be notified on the amount of time remaining. A verbal notice will be given at thirty (30), fifteen (15), and five (5) minutes intervals, prior to the end of the time limit.**
d) **The minimum-passing grade of eighty percent (70%) is required to pass the written test.**
e) **The test is not an "open book" type of test. Only the test booklet and answer sheet is to be used.**

**Hands-on Inspection**

a) **The test candidate will be required to perform an actual physical inspection of a school bus. All equipment including pen, pencil and PPE, light, creeper, etc. needed to take the test shall be provided by the candidate.**
b) **A Type C or Type D school bus with air brakes will be used in the hands-on test.**
c) **The candidate should use the information learned in the training class and professional knowledge to perform the inspection.**
d) **The inspection manual may be used as a guide during the inspection process.**
e) **Basic assistance will be provided upon request for operation of lights or other accessories, while the candidate performs the inspection.**
f) **A time limit of thirty (30) minutes will be allowed to complete this part of the test.**
g) **Test candidates will be notified on the amount of time remaining. A verbal notice will be given at fifteen (15) and five (5) minutes intervals, prior to the end of the time limit.**
h) **The bus will have a minimum of ten (10) "must find" defects/deficiencies (or bugged items) that the candidate must identify and properly note on the inspection form.**
i) **These defects/deficiencies can be either existing defects/deficiencies on the bus or ones created by the SCDE staff.**
j) **Each deficiency or bugged item discovered counts as ten (10) points.**
k) **A minimum of seven (7) of the ten (10) defects/deficiencies used in the test must be properly noted on the form.**

**School Bus Brakes:**

a) **Consists of a multiple choice question test. All questions are related to the material in the school bus brake workshop manual and handouts.**
   **A time limit of one and one half-hours (1 and1/2) will be allowed to take the test.**
b) **Test candidates will be notified on the amount of time remaining. A verbal notice will be given at thirty (30), fifteen (15), and five (5) minutes intervals, prior to the end of the time limit.**
c) **The minimum-passing grade of seventy percent (70%) is required to pass the written test.**
d) **The test is not an "open book" type of test. Only the test booklet and answer sheet is to be used.**

## TECHNICIAN MONTHLY CHECK SHEETS

**<u>Requirements:</u> A Technician Monthly Check Sheet must be completed on every assigned vehicle (buses or support) that is listed in Route, Spare, or Active Hold. All items on these sheets must be dated when checked and sheets must be signed by the technician prior to submitting to the Service Manager for review. After review, the Service Manager will sign the sheets.**

**These sheets should be established at the first of each school year by typing in the complete vehicle numbers and copying these sheets for each month of school. Areas that are not appropriate for a vehicle shall be marked not applicable.**

**<u>Records:</u> The files containing the records for the Technician Check Sheets will be kept in the Service Manager's file cabinet. The completed technician check sheets are to be kept in individual folders by technician. These sheets will be removed from the files at the conclusion of the school year and stored for three years. All technician check sheets shall be emailed to the assigned Fleet Specialist at the end of each month.**

**At any time during the year there should be one completed Technician Check Sheet in each individual's file, for each completed month.**

## TOWING of BUSES

**When towing school buses with SCDE owned wreckers, the utmost caution must be exercised. All components of the wrecker must be closely inspected after each use and during the normal vehicle inspection period. This process will ensure that cables, winches, booms, and safety chains on our wreckers are always maintained in good mechanical condition. Normal precautions, wrecker amber safety light "ON", hazard lights flashing, and auxiliary tow light must be fixed to the rear of the towed vehicle.**

**Vehicles must be towed using a "heavy duty" type wrecker. No SCDE "*constructed*" wrecker shall be used to tow a vehicle.**

**Contracted towing services may be used when other such conditions exist that would create an unsafe atmosphere for department employees or other motoring public. Contact your assigned Regional Manager if you have any questions on contracting towing services.**

## TRACTOR and IMPLEMENTS

**The SCDE Tractor / Mower and all associated implements shall be used solely for the landscaping and property maintenance of SCDE owned and operated grounds. As with all SCDE owned equipment, the above said tractor and associated implements shall not be used for personnel use.**

**Do not use the tractor to push or pull buses or support vehicles.**

**Routine tractor / mower and implement maintenance shall be performed in accordance with the operator's manual. Annual maintenance procedures on the tractor shall be performed in accordance with the SCDE's (*) annual maintenance policy on school buses and support vehicles.**

**(*) The wheels and brake assemblies will not have to be removed during annual maintenance.**

## FORKLIFT

**The SCDE Forklift and all associated implements shall not be used for personnel use.**

**Do not use the forklift to push, pull, or raise buses or support vehicles.**

**Routine forklift and implement maintenance shall be performed in accordance with the operator's manual. Annual maintenance procedures on the forklift shall be performed in accordance with the SCDE's (*) annual maintenance policy on school buses and support vehicles.**

**(*) The wheels and brake assemblies will not have to be removed during annual maintenance.**

**SCDE Vehicle Inspection Requirements**

**The Operations Manager of every department owned vehicle maintenance facility shall be responsible for insuring that each vehicle assigned to their facility for maintenance is inspected in accordance with the procedures established herein.**

**Each assigned vehicle that is listed in Route, Spare, or Active Hold status must be inspected a minimum of once quarterly or 4000 miles. These inspections must be performed by an inspector that has been certified by the South Carolina Department of Education, Office of Transportation (SCDE). Additionally, the Operations Manager shall be required to participate in minimum of ten (10) vehicles inspections per month.**

**The primary inspector for any given maintenance facility shall be the Service Manager/Assistant Service Manager. However, assistance in completing the required inspections may be provided by any SCDE certified inspector. If SCDE personnel that are not certified as an inspector are assisting a certified inspector, these individuals may inspect vehicle components/systems provided the certified inspector they are assisting ensures that they are properly trained in the inspection procedures and the associated repair/out of service criteria. In such cases, the certified inspector remains responsible for the proper inspection of all items.**

**For the purposes of this program:**

- **Use of the term "vehicles" shall be understood as including all school buses, boat, and support vehicles/equipment.**
- **Use of the term "inspection" shall be understood to mean a full and complete inspection as defined in the certification program.**
- **It should be noted that an "inspection" can not be completed on a vehicle that is non-operational ( power train or primary component system inoperable).**

**After the inspection has been completed on a vehicle, the in-quarterly workorder should be completed with all test results and closed. All repair defects shall be entered as an extended repair workorder in the current maintenance software. The technician will make the appropriate repairs based on having the necessary parts available and finish the work order. All extended repairs <u>should be</u> completed by the end of the next quarter.**

**<u>Out of Service defects will be on a separate workorder. Vehicles can not be placed back in service until all of the out of service defects are repaired and the workorder is closed</u>.**

## USE OF VEHICLE END LIFTS

**The following pages cover in detail the use of Vehicle End Lifts (bumper jacks) commonly used in our facilities. Additionally, this document will address the requirement for using jack stands and the placement of such.**

**Our shops have typically used jack stands with a height adjustment range of 20" -30". Because of different vehicle configurations and the service/repair being performed, some shops may need to purchase jack stands with different height range adjustments. The most common sizes available in suitable capacities (7 ton, 10 ton) for most school buses are: 12"-20", 20"-30", and 30"-50". This is not to be interpreted as a need to purchase all 3 sizes identified for all technicians. Jack stands are to be provided based on the actual needs of each individual shop and should be discussed with your Regional Manager prior to purchase.**

**Pay particular attention to the sections of the following pages regarding Type D buses that are designed with an inner chassis bumper and an outer body bumper. At NO time is it permissible to lift or support this type bus using only the outer body bumper.**

**NO work shall be performed on a vehicle that has been lifted from the ground without first placing appropriate jack stands under the vehicle. This includes tire service or other repairs being performed away from the shop.**

# USE OF VEHICLE END LIFT (BUMPER JACK)

**Intended use of Vehicle End Lift:** To engage the metal bumper of a vehicle and lift for the purpose of vehicle service/repair. Vehicle end lifts are designed to lift, but not continually support rated capacity loads. Immediately after lifting, the load must be transferred from the end lift to appropriately rated jack stands.

**WARNING: Do not work under a vehicle supported by an end lift. Use appropriate jack stands properly placed and supporting the vehicle when working under vehicle.**

## Using Vehicle End Lift

**WARNING: Prior to use of any lifting equipment; read equipment operating instructions and familiarize yourself with the product and all components. Always recognize the potential hazards associated with the use of any lifting equipment.**

1. Park vehicle on level surface that provides the necessary firmness to support the weight of the vehicle concentrated on the footprint of the jack.

2. Place wheel chocks at the front of the front tire and the rear of the rear tire.

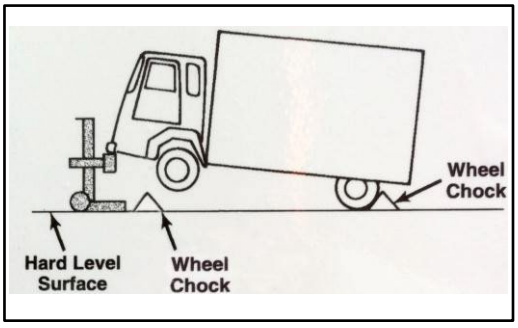


3. Inspect vehicle bumper for damage and all bumper attaching points for missing, loose, or damaged fasteners. Repair as necessary before proceeding.

4. Ensure that lift is of sufficient capacity, that the lift rolls freely, that the air cylinder operates smoothly when the unloaded lift is raised/lowered throughout the lifting range, and that lift locking device functions as designed.

5. Ensure that lift is placed at the approximate centerline of the vehicle, that the lift saddles are equal distance from the lift center, that lift saddles are as close to the bumper to frame attachment points as possible, and that the saddles are positioned directly under the vehicle bumper. (Illustration 1)



*Illustration 1*

6. Release the vehicle parking brakes. Vehicle must be allowed to move (follow the jack) as it is being lifted.

7. As contact is made between the lift saddles and the bumper, inspect to ensure that lift saddles are properly positioned and the bumper is firmly seated on the saddle surface. (Illustration 2) **CAUTION**: **On Type D buses w/ an inner chassis bumper; ensure that both the inner chassis bumper and the outer body bumper are firmly seated on the lift saddles. (Illustration 3)**



*Illustration 2*



*Illustration*

8. Jack the vehicle only to the height necessary for the required service/repair.

9. After servicing is complete, lift the vehicle just enough to remove the jack stands and carefully lower vehicle.

**Using Jack Stands**

**WARNING: Prior to use of jack stands always inspect for damage and to ensure that stands, including locking devices, function as designed.**

1. Ensure jack stands are of sufficient capacity and are of appropriate height for vehicle service/repair being performed.

2. Always use jack stands in pairs when transferring load from end lift.

3. Jack stand should be placed on level surface that provides the necessary firmness to support the weight of the vehicle concentrated on the footprint of the jack stand.

4. Jack stands should be placed under the front bumper, front axle, frame rail, or rear axle housing. (See Illustrations below) **CAUTION**: **On Type D buses w/ an inner chassis bumper; do not place jack stands under the outer body bumper only.**

5. As contact is made between the jack stands and supporting member, inspect to ensure that saddles are properly positioned before engaging full load.



Front Bumper



Front Axle

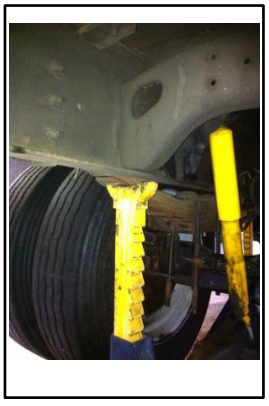

Frame Rail



Rear Axle

## VEHICLE AND EQUIPMENT REMAINING OEM

**Vehicles and equipment should be repaired in such a way that they conform to the standard specifications for the particular vehicle or equipment. Therefore, when it becomes necessary to make repairs to buses, support vehicles or equipment, the repairs should be made so that the item will be the same as when it was received new.**

**This practice will ensure the highest level of safety and standardization, while ensuring warranty, EPA, NHTSA, OSHA and FMVSS compliance.**

**It may be necessary, however, that we make repairs or changes that are not consistent with the manufacturer's recommendations. If this is the case, these repairs must be discussed and approved by the assigned Fleet Specialist. In such cases, a decision will be made at the state level prior to the individual shops making changes.**

**All support vehicles shall be kept clean and presentable, so as to represent the agency and its mission in a positive and professional manner.**

**Under no circumstances should an SCDE employee make any changes to vehicles or equipment that is not consistent with OEM recommendations without prior approval from your assigned Fleet Specialist or the State Office.**

## WHEEL BEARING/SEAL SERVICE INTERVAL

**<u>New Vehicles:</u> Each time a new vehicle is received at your shop, part of the inspection process will include raising the wheels and checking for excessive wheel bearing end play.**

**<u>1st Annual Repair:</u> As a part of the 1st Annual Repair, all vehicles will have the wheel bearings checked for proper wheel bearing adjustment.**

**Additional service/replacement requirements will be based on the type of bearing lubrication system and brake systems as indicated below.**

**<u>ALL Wheel End Groups (drum or disc) EXCEPT Outboard Mounted:</u>**
**Each time the brake drums/rotors are replaced; the wheel bearings must be removed, cleaned, inspected, replaced if necessary and properly lubricated. New grease seals must be installed and the bearings adjusted consistent with the manufacturer's recommendations.**

**<u>ALL Outboard Mounted Wheel End Groups: (drum or disc)</u>**
**A minimum of once every 100,000 miles the wheel bearings must be removed, cleaned, inspected, and replaced if necessary. New grease seals must be installed and the bearings adjusted consistent with the manufacturer's recommendations.**

***Wheel bearings/seals should also be serviced/replaced if any inspection of these items indicates possible failure. All shops must be installing unitized design seals whenever possible. This type of seal offers longer life and a greater degree of re-usability. All manufactures installation instructions and tools must be used when installing wheel seals.***

## WHEEL-BEARING ADJUSTMENT PROCEDURES - (NON DISC BRAKE BUSES)

**Buses maintained by SCDE must have a verifiable wheel bearing end play of 0.001" to 0.005".**

**The following service procedures apply to steer and drive axle assemblies using conventional double nut or single nut systems. Follow these service procedures carefully to prevent premature wheel-end component failure and increase seal and bearing life.**

**ABS (anti-lock braking systems) and traction control systems with wheel-end sensing require precise bearing adjustment to function properly.**

**This procedure details proper service procedures for D-type, bendable-type, and dowel- type spindle nut washers.**

**NOTE: For single nut self-locking systems, consult manufacturer's instructions.**

**If you have a system that differs from what is indicated in this procedure, consult the vehicle manufacturer's recommended procedure.**

**WARNING: Never work under a vehicle supported by only a jack. Always support the vehicle with jack stands. Block the wheels and make sure the unit will not roll before releasing brakes.**

**CAUTION: If your axle is equipped with spoke wheels and the rim clamps have been dis-assembled to remove the tire and rim assembly, the tire and rim assembly must be reinstalled and the rim clamps properly torqued BEFORE adjusting the wheelbearings. Failure to do this may result in improper wheel bearing adjustment.**

## AIR DISC BRAKE EQUIPPED BUSES

**These buses are equipped with Conmet Preset Hubs. Follow the manufactures recommendations for service and adjustment.**

## REFERENCES:

**SCDE Brake Manual**
**TMC RP 622, Wheel Seal and Bearing Removal, Installation and Maintenance.**

**HVAC**

**HVAC repairs shall be considered high priority.**

**All HVAC components must operate on a SPED vehicle, or it shall be placed Out of Service until all repairs are completed.**